CHARNWOOD

ISLAND

Operating

and

Installation

Instructions

for the

Island^{I}, Island^{II} and Island^{III}

CHARNWOOD Bishops Way, Newport, Isle of Wight PO30 5WS, United Kingdom

T:+44 (0)1983 537777 F:+44 (0)1983 537788 charnwood@ajwells.co.uk www.charnwood.com

A Division of A.J.Wells & Sons Limited Registered in England No. 03809371

CHARNWOOD
ISLAND
Operating Instructions

Before lighting the stove check with the installer that the work and checks described in the Installation Instructions have been carried out correctly and that the chimney has been swept, is sound and free from any obstructions. The stove is not suitable for use in a shared flue system.

Your Island stove has been designed to work with the minimum effort. If any operation - such as riddling the grate or opening and closing the doors - begins to require extra force then the cause must be investigated and corrected to prevent damage being caused to the stove.

Remember that the stove will be hot and that it is made from hard materials - ensure that you have a good balance before operating the fire.
This stove is capable of intermittent operation.

FUEL

This stove is intended primarily for burning wood. Only dry well seasoned wood should be burnt on this appliance as burning wet unseasoned wood will give rise to heavy tar deposits in the stove, on the glass and within the chimney. For the same reason hard woods (such as Ash, Beech and Oak) are better than soft woods (such as Pine and Spruce.) Burning wet unseasoned wood will also result in considerably reduced outputs. The wood should be cut and split and then left to season in a well ventilated dry place for at least one year but preferably two years before use.

PETROLEUM COKE IS NOT SUITABLE FOR USE ON THIS APPLIANCE. ITS USE WILL INVALIDATE THE GUARANTEE.

For advice on other fuels please contact Charnwood.

DOOR OPERATION

The door handle has been carefully designed so that in normal use it may be operated using bare hands. However, if you need to open the doors when the fire is running at maximum then the use of a cloth or glove may be required.

Take care not to touch the doors as they will be hot when the fire is burning. Turn the door handle clockwise to open, and anti-clockwise to close. The stove is normally run with the doors shut.

MULTI GRATE

Your Charnwood Island is fitted with a multi grate to enable wood to be burned and ash to be cleared. The grate has two positions:-

1) In the open position the grate bars are vertical with gaps in between allowing the primary combustion air to come up through the grate and through the fuel bed.

2) In the closed position the grate bars are horizontal, allowing the combustion air to come round the sides of the grate and over the top of it. When in the closed position ash is able to build up on the grate as is necessary for effective wood burning.

Movement of the grate from one position to the other is effected using the tool supplied as shown in Fig. 2. The grate is put into the

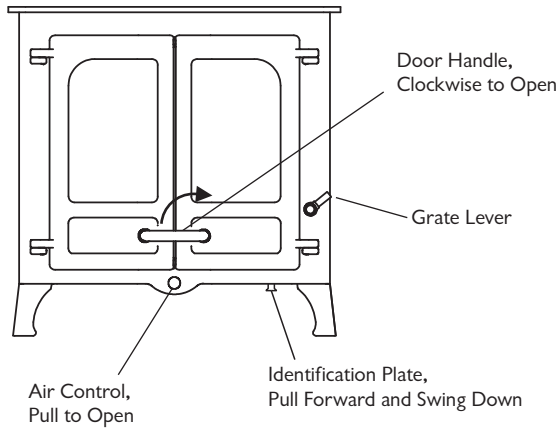

Fig. 1. Stove Controls

open position by moving the tool up until the handle is in the 1 o'clock position. The grate is put into the closed position by moving the tool down until the handle is in the 5 o'clock position. To riddle the appliance the tool should be moved between the 1 o'clock and 3 o'clock positions several times. When burning wood the ash should be allowed to build up and riddling should only be carried out once or twice a week.

LIGHTING

Light the Stove using dry kindling wood and paper or fire lighters. Set the grate into either the closed position or the open position as required. Place the paper, or fire lighters, and kindling on the grate and cover with a few small dry logs. Open the air control fully (see Fig. 1.) Light the paper or fire lighters. Close the doors until the fuel is well ignited then load with fuel. Once the fire is up to temperature

the airwash system will begin to work, so allow the fire to become hot before adjusting the air controls to the required setting.

On initial lighting, the stove may smoke and give off an odour as the silicon paint with which the firebox is painted reacts to the heat. This is normal and will cease after a short time, but meanwhile the room should be kept well ventilated.

At first only light a small fire and burn it slowly for two hours to allow any residual moisture in the bricks to evaporate.

When relighting the stove, riddle slightly and then empty the ashpan.

CONTROLLING THE FIRE

The fire is controlled by the single air control knob shown in Fig. 1. Pull the knob out to make the fire burn faster, push it in to make the fire burn slower.

This unique QuattroFlow™ air control* provides carefully balanced primary, secondary, tertiary and bypass air to enable optimum burning conditions without the need to fiddle with multiple controls.

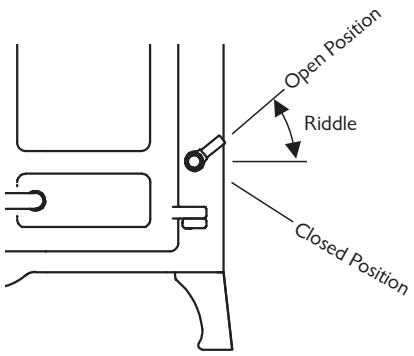

Fig. 2. Multifuel Grate

RIDDLING

When burning wood, ash should be allowed to build up and only riddled when the ash begins to cover the slots in the rear fireplate. The fire should be riddled with the doors shut (see Fig. 2.) Place the tool onto the riddling lever and rotate between the 1 o'clock and 3 o'clock positions several times. Too much riddling can result in emptying unburnt fuel into the ashpan and should therefore be avoided. After riddling, the grate should be put back into the open or closed position as required (the tool should be in the 1 o'clock position for open grate or in the 5 o'clock position for closed grate).

REFUELLING

Keep the firebox well filled but do not overfill to prevent fuel from spilling over the top of the front fire bar. Logs should be evenly distributed, filling the firebed to give the most pleasing flame pattern Care should be taken especially when burning wood that fuel does not project over the front fire bar or damage to the glass may be caused when the doors are closed, it can also cause the glass to black up . Maximium filling height is such that logs cannot fall from the fire when the doors are opened. Liquid fuels are not to be used on this appliance.

ASH CLEARANCE

The ashpan should be emptied regularly before it becomes too full. Never allow the ash to accumulate in the ashpan so that it comes in contact with the underside of the grate as this will seriously damage the grate bars. The ashpan is handled using the tool provided. Care should be taken to ensure that ash is cool before emptying it into plastic liners or bins.

To make ash removal easier there is a special Charnwood ash carrier available. This may be purchased from your supplier or, in case of difficulty, from ourselves.

SPECIAL POINTS WHEN BURNING WOOD

The grate should be kept in the closed position and should not be riddled until the ash becomes so deep that it begins to block the passage of air into the firebox at the sides or back of the grate. When this is the case do not remove all of the ash using the riddling mechanism but keep a layer about half an inch thick as this enables the wood to burn more effectively. When lighting the fire a few small dry logs with a good amount of kindling will help to get the fire up to temperature quickly.

MAINTENANCE

Cleaning

The stove is finished with a high temperature paint which will withstand the temperatures encountered in normal use. This may be cleaned with a damp lint-free cloth when the stove is cold. Should re-painting become necessary then special high temperature paints are available from your supplier or from Charnwood.

Cleaning the Glass

The glass in the doors is a special ceramic glass which is able to withstand high temperatures. Before cleaning the glass open the doors and allow them to cool. Clean the glass using a damp cloth and then wipe over with a dry cloth. Any stubborn deposits on the glass may be removed with a proprietary stove glass cleaner or ceramic hob cleaner. Some deposits on the glass may be burnt off simply by running the fire at a fast rate for a few minutes. Do not use abrasive cleaners or pads as these can scratch the surface which will weaken

*Patent No.2389414

the glass and cause premature failure. Aerosol spray cleaners should not be used near the appliance whilst it is under fire.

When Not in Use

If the fire is going to be out of use for a long period (for instance in the summer) then to prevent condensation, and hence corrosion, the air control should be left fully open and the fire doors left ajar. It is also advisable to sweep the chimney and clean out the fire. Spraying the inside of the doors and firebox with a light oil, such as WD40, will also help to keep all internal parts working well.

After long periods where the fire has been out of use, the chimney and appliance flueways should be cleaned before lighting.

Door Seals

For the fire to operate correctly it is important that the door seals are in good condition. Check that they do not become worn or frayed and replace them when necessary.

Servicing

It is recommended that the fire is serviced once a year to keep it in first class working order. After cleaning out the firebox thoroughly, check that all internal parts are in good working order, replacing any parts that are beginning to show signs of wear. Check that the doors seals are in good condition and that the doors seal correctly. A servicing guide is available on request. Repairs or modifications may only be carried out by the Manufacturer or their approved agents. Use only genuine Charnwood replacement parts.

THROAT PLATE AND FLUEWAY CLEANING

It is important that the throat plate and all the stove flueways are kept clean. They should be checked approximately once a week, by looking up into the firebox for signs of soot or fly-ash on the throat plate and at the sides of the firebox. If there are signs of a build up of soot or fly-ash deposits then the fire must be let out in order to clean the throat plate and flueways.

Before attempting to clean the throat plate and flueways ensure that the fire is cold. Wear suitable gloves to prevent irritation from soot deposits. To remove the throat plate lift the front edge up and slide the plate forward until it comes clear of the front pegs, then swing the front edge down (see Fig. 3.).

CHIMNEY SWEEPING

The chimney should be swept at least once a year. Where a top outlet is used it will generally be possible to sweep the chimney through the appliance.

First remove the front firebar, side fire plates, and the throat plate. Then sweep the chimney ensuring that soot is removed from all horizontal surfaces after sweeping.

In situations where it is not possible to sweep through the appliance the installer will have provided alternative means, such as a soot door.

After sweeping the chimney the appliance flue outlet and the flue pipe connecting the stove to the chimney must be cleaned with a flue brush.

After clearing any soot from within the stove, replace the throat plate (see Fig. 3), the side fireplates, and front firebar .

Different types of sweep's brushes are available to suit different flueways. For standard brick chimneys a wire centre sweep's brush fitted with a guide wheel is recommended. For prefabricated insulated chimneys the manufacturers instructions with regard to sweeping should be consulted.

TROUBLE SHOOTING

Fire Will Not Burn.

Check that:

a) the air inlet at the rear of the stove is not obstructed in any way,
b) chimneys and flueways are clear,
c) that a suitable fuel is being used,
d) that there is an adequate air supply into the room,
e) that an extractor fan is not fitted in the same room as the stove.
f) there is sufficient draw in the chimney, (once the chimney is warm a draught reading of at least 0.10 inches (2.5mm) water gauge (25 Pa) should be obtained).

Door Glass Blacks Up

Keeping the glass clean requires a certain amount of experimentation due to the differences in the draw of different chimneys. The following points should be noted and with a little care should enable the glass to be kept clean in most situations:

a) The airwash relies on a supply of heated air to keep the glass clean, therefore, when lighting the stove allow the firebed to become well established before closing the air control. This also applies when re-fuelling the stove.

b) When re-fuelling keep the fuel as far back from the front firebar as possible, do not try to fit too much fuel into the firebox.

c) Wet wood or logs overhanging the front firebars will cause the glass to blacken.

d) There is a bypass slide that can be adjusted to suit the particular installation. This allows a small amount of airwash air to enter the stove even when the air control is closed. This can be adjusted to help

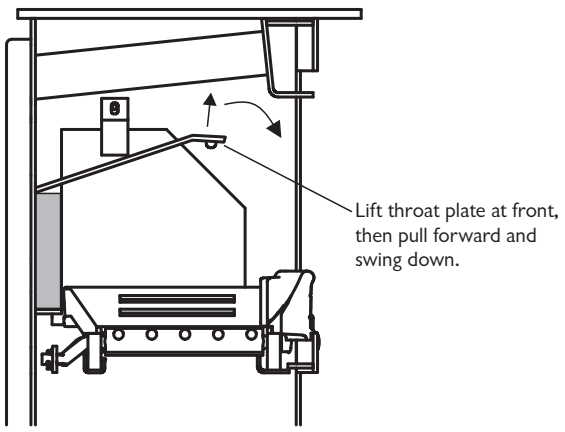

Fig. 3. Throat Plate

with keeping the glass clean when the fire is slumbering.

It is always more difficult to keep the glass clean when running the stove very slowly for long periods.

Check that all flue connections and the blanking plate are well sealed. It is also important that the chimney draw is sufficient, (when the chimney is warm a draught reading of at least 0.10 inches water gauge (25 Pa) should be obtained), and that it is not affected by down-draught.

Occasionally some blackening of the glass may occur below the level of the front firebars. This will not obscure the view of the fire or affect its performance.

Fume Emission.

Warning Note: Properly installed and operated this appliance will not emit fumes. Occasional fume from de-ashing and re-fuelling may occur. Persistent fume emission is potentially dangerous and must not be tolerated. If fume emission does persist, then the following immediate actions should be taken:

a) Open doors and windows to ventilate the room.
b) Let the fire out and safely dispose of the fuel from the appliance.
c) Check for flue or chimney blockage, and clean if required.
d) Do not attempt to re-light the fire until cause of fume has been identified, if necessary seek professional advice.

The most common cause of fume emission is flueway or chimney blockage. For your own safety these must be kept clean.

Fire blazing out of control

Check that :

a) The doors are tightly closed.
b) The air control is pushed in .
c) A suitable fuel is being used.
d) Door seals and air control flap pads are intact.

Chimney Fires.

If the chimney is thoroughly and regularly swept, chimney fires should not occur. However, if a chimney fire does occur push the air control in fully tightly close the doors of the appliance. This should cause the chimney fire to go out in which case the control should be kept closed until the stove has gone out. The chimney and flueways should then be cleaned. If the chimney fire does not go out when the above action is taken then the fire brigade should be called immediately.

After a chimney fire the chimney should be carefully examined for any damage. Expert advice should be sought if necessary.

If You Need Further Help

If you need further help with your Charnwood Island then your Installer will be able to provide the answers to most questions. Your Local Charnwood Premier Dealer has a great deal of experience and will also be able to provide helpful advice. Further help is available from the Charnwood Customer Services department who will be pleased to give advice, if necessary.

CHARNWOOD

ISLAND

Installation Instructions

HEALTH AND SAFETY PRECAUTIONS

Please take care when installing the stove that the requirements of the Health and Safety at Work Act 1974 are met.

Some types of fire cement are caustic and should not be allowed to come into contact with the skin. In case of contact wash with plenty of water.

If there is a possibility of disturbing any asbestos in the course of installation then please use appropriate protective equipment.

There must not be an extractor fan fitted in the same room as the stove as this can cause the appliance to emit fumes into the room.

There must be an adequate air supply into the room in which the appliance is installed to provide combustion air. The combustion air supply must be via a permanently open vent. Minimum free areas are:– **Island 1** 5.5cm^2 (0.85in^2) **Island 2** 16.5cm^2 (2.5 in^2) & **Island 3** 38.5cm^2 (6 in^2) .This is particularly necessary if the room is double glazed. It must be positioned such that it is not liable to blockage.

This stove is not suitable for use in a shared flue system.

In addition to these instructions the requirements of BS.8303 and BS.6461 Pt 1&2; 1984 must be fulfilled. Local Authority Bylaws and Building Regulations, including those referring to National and European Standards regarding the installation of Solid Fuel burning appliances, flues and chimneys must also be observed.

SPECIFICATION

	Island I	Island II	Island III
Output kW (BTU/h)	**6.0** (20,819)	**8.0** (27,300)	**12.0** (40,900)
Mass kg (Lb)	**130** (287)	**140** (309)	**170** (375)
Flue Gas Temp °C	**247**	**350**	**360**
Flue Gas Mass Flow G/s	**5.0**	**5.9**	**8.1**
Max Hearth Temp °C	**61.5**	**78.8**	**93.7**

The outputs were obtained burning seasoned hardwood over a 1.5 hourly re-fuelling cycle.

CHIMNEY

In order for the appliance to perform satisfactorily the chimney height must not be less than 4 metres measured vertically from the outlet of the stove to the top of the chimney. For the ISLAND^{I} & ISLAND^{II} the chimney must not be less than 150 mm (6 inches) internal diameter or 150 x 150mm internal square. For the ISLAND^{III} the chimney must not be less than 175 mm (7 inches) internal diameter or 175 x 175mm internal square. If an existing chimney is to be used it must be swept and checked, it must be in good condition, free from cracks and blockages, and should not have an excessive cross sectional area. If you find that the chimney is in poor condition then expert advice should be sought regarding the necessity of having the chimney lined. If it is found necessary to line the chimney then a lining suitable for Solid Fuel must be used.

If there is no existing chimney then a prefabricated block chimney or a twin walled insulated stainless steel flue to BS.4543 can be used either internally or externally. These chimneys must be fitted in accordance with the manufacturers instructions and Building Regulations.

Anki pumice liners or chimney blocks will give a highly insulated chimney which will work well with all fuels. For details ring Anki Chimney Systems on (01983) 527997.

Single wall flue pipe is suitable for connecting the stove to the chimney but is not suitable for using for the complete chimney.

If it is found that there is excessive draw in the chimney then a draught stabilizer should be fitted.

It is important that there is sufficient draw in the chimney and that the chimney does not suffer from down-draught. When the chimney is warm the draw should be not less than 0.10 inches water gauge (25Pa). If in doubt about the chimney seek expert advice.

HEARTH AND FIRE SURROUND

The stove arrives bolted and shrink-wrapped to its pallet which is intended to be cut up and used for kindling fuel.

The stove must stand on a fireproof hearth and combustible materials must not be used in the construction of the fireplace unless adequately fireproofed in accordance with local building regulations.

The hearth must be at least 12mm (0.5inches) thick. The positioning of the stove and the size of the hearth are governed by building regulations for Class 1 appliances. These building regulations state that the hearth must extend in front of the stove by at least 300mm (12 inches) and to the sides of the stove by at least 150mm (6 inches). If in doubt as to the positioning of the stove expert advice should be sought either from the supplier or the local building inspector.

The fireplace must allow good circulation of air around the appliance to ensure that maximum heat is transferred to the room and also to prevent the fireplace from overheating. A gap of 150mm (6 inches) each side and 300mm (12 inches) above the appliance should give sufficient air circulation. If a wooden mantelpiece or beam is used in the fireplace it should be a minimum of 460mm (18 inches), and preferably 600mm (24 inches) from the appliance. In some situations it may be necessary to shield the beam or mantelpiece to protect it.

In order for the fire to operate correctly there must be an air gap behind the appliance of at least 40mm, but be aware that this distance will need to be greater in some cases to meet Building Regulation requirements.

CONNECTIONS TO FLUES

There are several ways of connecting the stove to the flue. These are illustrated in figures 4 to 7.

If a top flue connection (as shown in Fig.6) or the vertical rear flue connector (shown in Fig. 7) is used, then the chimney may be swept through the appliance.

Horizontal lengths of flue must be kept to a minimum and should not be more than the flue diameter. The sealing face of the flue collar should be coated with fire cement before fixing to the body of the stove using the two screws provided. The blanking plate must be removed, sealed with fire cement and refitted, care being taken to ensure that the fold on the clamping plate is in line with the lugs on the firebox as shown on the label on the clamping plate. Ensure that the clamping plate does not prevent the throat plate from seating correctly. All flue connections must be well sealed.

SOOT DOORS

It is possible to pass a 16 inch diameter sweeps brush through the appliance but in most back outlet installations it will be necessary to have a soot door to enable the chimney to be swept. This may either be in the actual brickwork of the chimney or in the register plate. Various types and positions of soot doors are shown in figures 4 to 7.

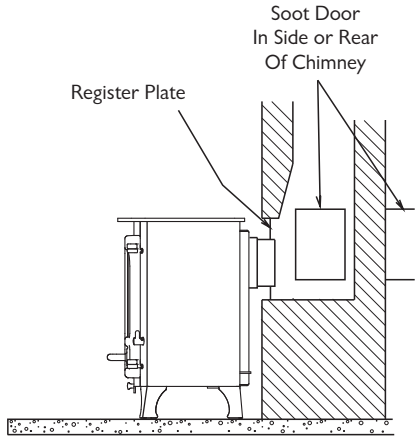

Fig. 4. Vertical Register Plate With Bricked Up Fireplace

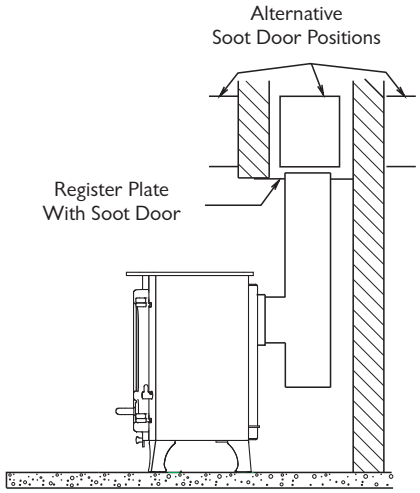

Fig. 5. Horizontal Register Plate With Rear Flue Connection

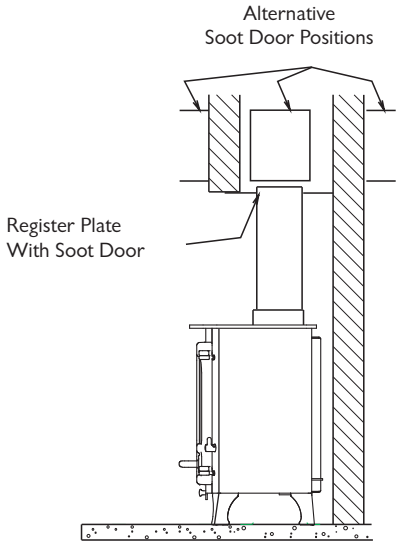

Fig. 6. Horizontal Register Plate With Top Flue Connection

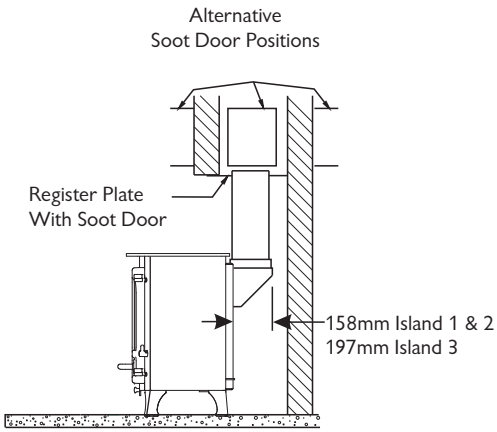

Fig. 7. Horizontal Register Plate With Optional Vertical Rear Flue Connector

PRE LIGHTING CHECK

Before initial lighting the following points should be checked :-

1. The bottom grate bars must all be fitted and should move freel y and easily when the riddling mechanism is operated.

2. The plates round the sides and back of the grate must be in position and sitting correctly

3 The throat plate must be fitted in the roof of the appliance and should be checked to ensure that it has not become dislodged in transit. The method of location and positioning of the throat plate is shown in Fig. 3.

COMMISSIONING

On completion of the installation and after allowing a suitable period of time for the fire cement and mortar to dry out, the stove should be lit and checked to ensure that smoke and fumes are taken from the appliance up the chimney and emitted safely. Also check all joints and seals. On completion of the installation and commissioning please leave the operating instructions with the customer and advise them on the use of the appliance.

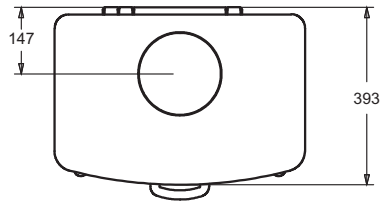

CHARNWOOD
ISLAND I

Flue Outlet To Suit 150mm (6”) Flue Pipe

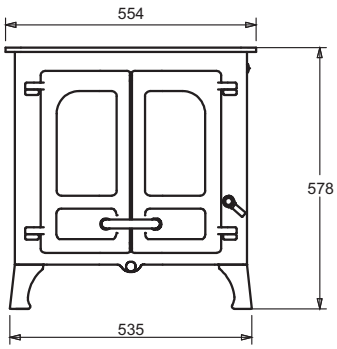

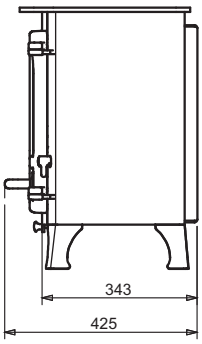

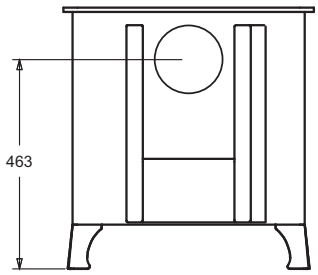

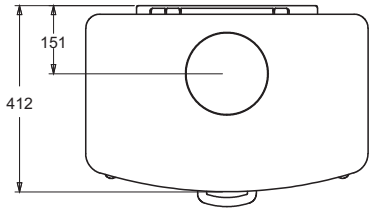

CHARNWOOD

ISLAND II

Flue Outlet To Suit 150mm (6”) Flue Pipe

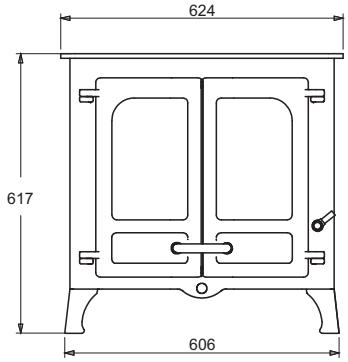

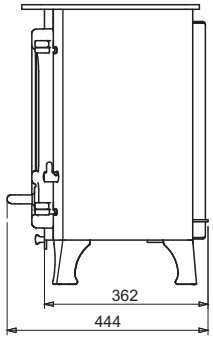

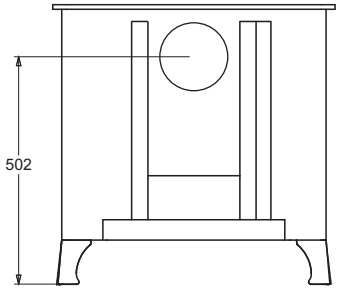

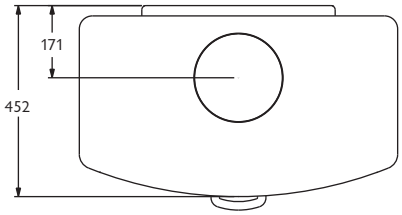

CHARNWOOD

ISLAND III

Flue Outlet To Suit 175mm (7”) Flue Pipe

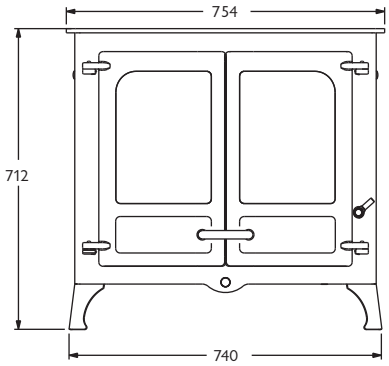

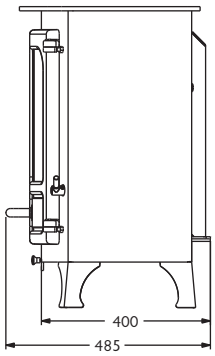

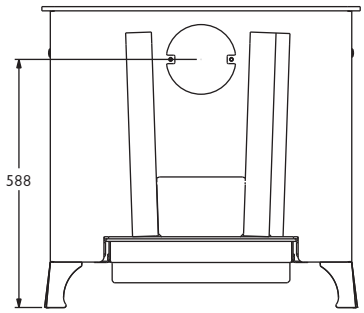

Issue G

Charnwood Island I
Parts List

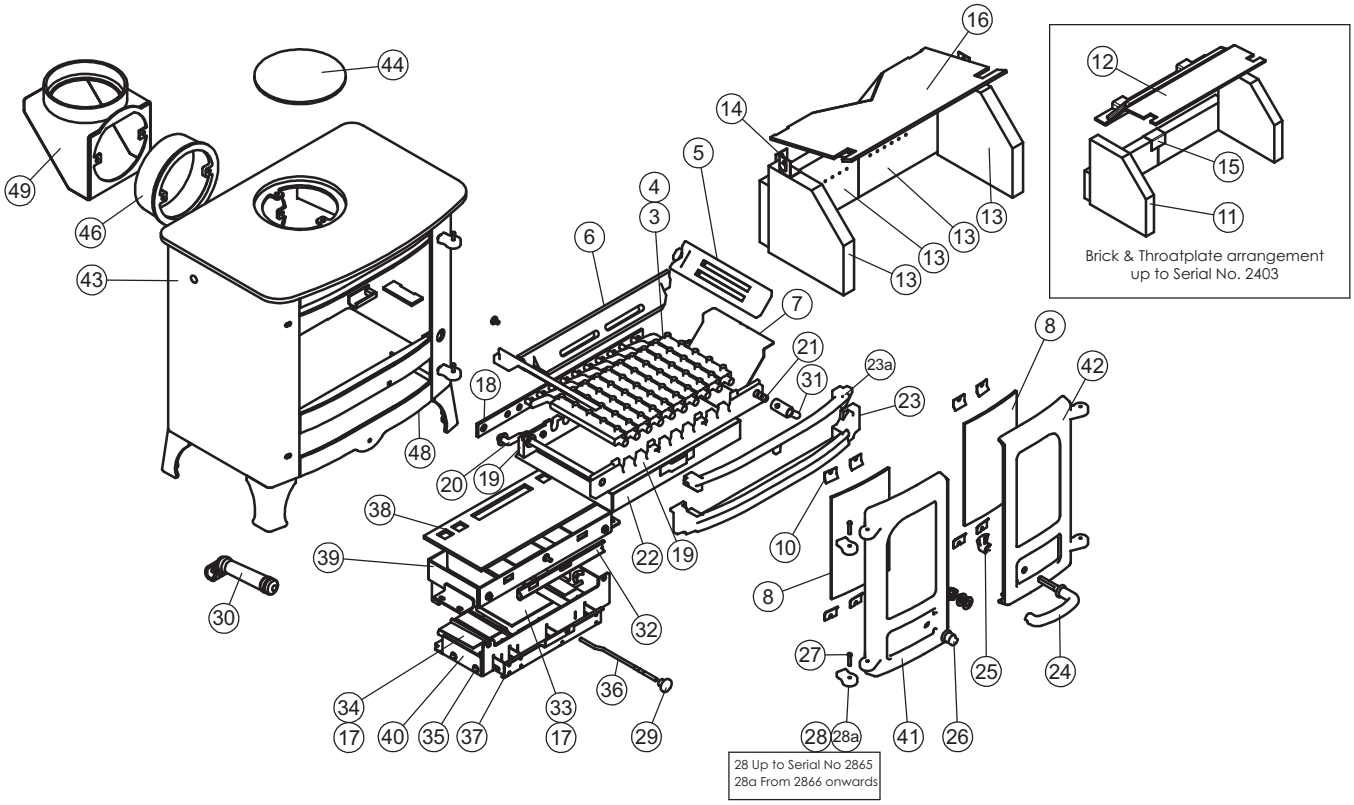

Item	Part No.	Description
1*	008/AY62S	Door Seal Set Inc. Adhesive
2*	008/FW29	Door Seal Adhesive
3	002/CG20	Bottom Grate Bar
4	002/CG20S10	Set of Grate Bars (10)
5	002/CY15	Side Fire Plate
6	002/AY16	Back Fire Plate
7	004/BY24	Ash Shedding Plate
8	006/AY18	Glass
9*	008/AY45	Glass Seal
10	004/KV23	Glass Retainer
11#	011/AY29S	Set of Fire Bricks (4)
12#	010/AY31	Throat Plate
13	011/AY48S	Set of Fire Bricks (4)
14	004/XV30	Brick Retainer (4)
15	004/LV24	Rear Brick Joining Bracket
16	010/AY47	Throat Plate
17	008/AY26S	Set of Air Inlet Flap Pads
18	012/AY33	Mover Bar
19	002/AY30	Carrier Bar
20	012/AY13	Idler Rod
21	012/AY15	Riddler Rod
22	004/AY17	Ashpan
23	002/AY07B	Front Firebar
23a	002/AY08	Deepening Bar
24	008/KV16	R.H. Door Handle
25	002/AY14	Door Catch Cam
26	008/KV13	L.H. Door Knob
27	008/BW39/S	Hinge Pin Set (4 per set)
28	002/AY28	Hinge Post
28a	002/PY24	Hinge Post
29	008/AY37	Air Control Knob
30	010/AY34	Riddling/Ashpan Tool
31	002/AY27	Riddler Knob
32	004/AY21	Air Bypass Slide
33	004/AY22-1P	Primary Air Inlet Flap
34	004/AY22-1S	Secondary/Bypass Air Inlet Flap
35	004/AY24-02	Flap Mounting Rod (inc. fixings)
36	004/BY23-07	Air Control Rod
37	004/AY23	Actuator Assembly
38	008/AY39	Upper Quattro Box Gasket
39	010/AY20	Upper Quattro Box
40	010/AY19	Lower Quattro Box
41	002/AY01	Left Hand Door
42	002/AY02	Right Hand Door
43	001/AY10	Firebox (Island I)
44	012/TW09	Blanking Plate
45	010/TW61	Clamping Plate
46	002/CH12B	Flue Collar
47	010/NV11	Flue Spacer Ring
48	012/AY11	Serial No. Label
49	010/TW33	Vert. Rear Flue Connector (Opt'l Extra)
50*	010/EW51	Ash Carrier (Optional Extra)

* These items are not shown on the drawing.
\# These items are only used on models up to Serial No. 2403

To obtain spare parts please contact your local stockist giving Model, Part No. and Description. In case of difficulty contact the manufacturer at the address shown.

This drawing is for identification purposes only.

CHARNWOOD Bishops Way, Newport, Isle of Wight PO30 5WS, United Kingdom

T:+44 (0)1983 537777 F:+44 (0)1983 537788 charnwood@ajwells.co.uk www.charnwood.com

Issue G

Charnwood Island II
Parts List

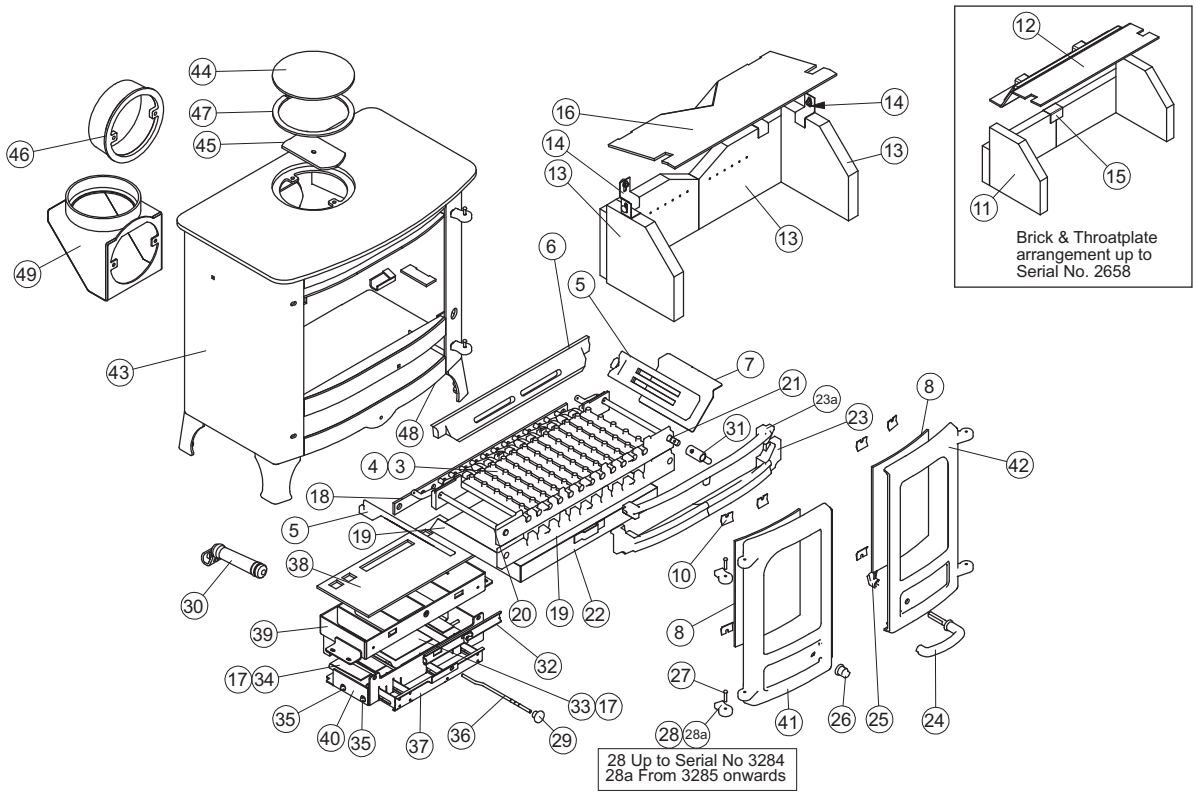

Item	Part No.	Description
1*	008/BY35S	Door Seal Set Inc. Adhesive
2*	008/FW29	Door Seal Adhesive
3	002/CG20	Bottom Grate Bar
4	002/CG20S12	Set of Grate Bars (12)
5	002/CY15	Side Fire Plate
6	002/BY16	Back Fire Plate
7	004/BY24	Ash Shedding Plate
8	006/BY18	Glass
9*	008/BY45	Glass Seal
10	004/KV23	Glass Retainer
11#	011/BY29S	Set of Firebricks (4)
12#	010/BY31	Throat Plate
13	011/BY48S	Set of Fire Bricks (4)
14	004/XV30	Brick Retainer (4)
15	004/LV24	Rear Brick Joining Bracket
16	010/BY47	Throat Plate
17	008/AY26S	Set of Air Inlet Flap Pads
18	012/BY33	Mover Bar
19	002/BY30	Carrier Bar
20	012/AY13	Idler Rod
21	012/AY15	Riddler Rod
22	004/BY17	Ashpan
23	002/BY07B	Front Firebar
23a	002/BY08	Deepening Bar
24	008/KV16	R.H. Door Handle
25	002/AY14	Door Catch Cam
26	008/KV13	L.H. Door Knob
27	008/BW39/S	Hinge Pin Set (4 per set)
28	002/AY28	Hinge Post
28a	002/PY24	Hinge Post
29	008/AY37	Air Control Knob
30	010/AY34	Riddling/Ashpan Tool
31	002/AY27	Riddler Knob
32	004/AY21	Air Bypass Slide
33	004/AY22-1P	Primary Air Inlet Flap
34	004/AY22-1S	Secondary/Bypass Air Inlet Flap
35	004/AY24-02	Flap Mounting Rod (inc. fixings)

Item	Part No.	Description
36	004/BY23-07	Air Control Rod
37	004/AY23	Actuator Assembly
38	008/AY39	Upper Quattro Box Gasket
39	010/AY20	Upper Quattro Box
40	010/AY19	Lower Quattro Box
41	002/BY01	Left Hand Door
42	002/BY02	Right Hand Door
43	001/BY10	Firebox (Island II)
44	012/TW09	Blanking Plate
45	010/TW61	Clamping Plate
46	002/CH12B	Flue Collar
47	010/NV11	Flue Spacer Ring
48	012/BY11	Serial No. Label
49	010/TW33	Vert. Rear Flue Connector (Opt'l Extra)
50*	010/BW51	Ash Carrier (Optional Extra)

* These items are not shown on the drawing.
#These items are only used on models up to serial No. 2658

To obtain spare parts please contact your local stockist giving Model, Part No. and Description. In case of difficulty contact the manufacturer at the address shown.
This drawing is for identification purposes only.

CHARNWOOD Bishops Way, Newport, Isle of Wight PO30 5WS, United Kingdom
T:+44 (0)1983 537777 F:+44 (0)1983 537788 charnwood@ajwells.co.uk www.charnwood.com

Issue E

Charnwood Island III
Parts List

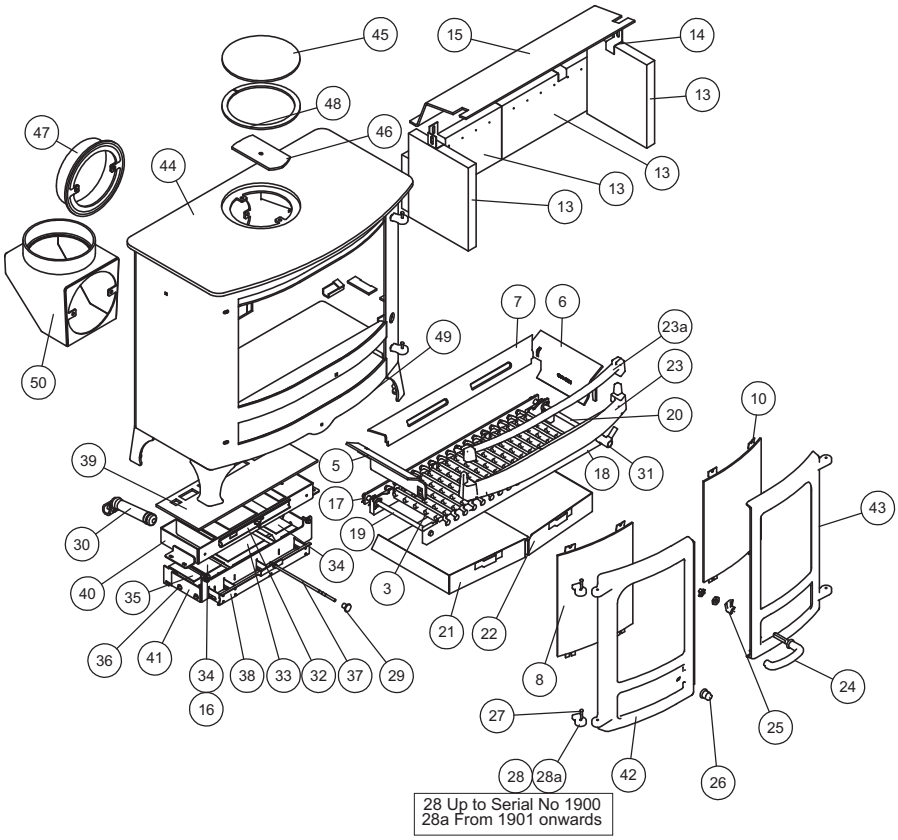

Item	Part	Description
1*	008/CY40S	Door Seal Set Inc. Adhesive
2*	008/FW29	Door Seal Adhesive
3	002/CG20	Bottom Grate Bar
4	002/CG20S12	Set of Grate Bars (12)
5	010/CY13L	Side Fire Plate L.H.
6	010/CY13R	Side Fire Plate R.H.
7	010/CY16	Back Fire Plate
8	006/CY18	Glass
9*	008/CY41	Glass Seal
10	004/KV23	Glass Retainer
13	011/CY29S	Set of Fire Bricks (4)
14	004/XV30	Brick Retainer
15	010/CY31	Throat Plate
16	008/CY26S	Set of Air Inlet Flap Pads
17	012/CY33	Mover Bar
18	002/CY30	Carrier Bar
19	012/AY13	Idler Rod
20	012/AY15	Riddler Rod
21	004/CY17L	Ashpan L.H.
22	004/CY17R	Ashpan R.H.
23	002/CY07C	Front Firebar
23a	002/CY08C	Deepening Bar
24	008/KV16	R.H. Door Handle
25	002/AY14	Door Catch Cam
26	008/KV13	L.H. Door Knob
27	008/BW39/S	Hinge Pin Set (4 per set)
28	002/AY28	Hinge Post
28a	002/PY24	Hinge Post
29	008/AY37	Air Control Knob
30	010/AY34	Riddling/Ashpan Tool
31	002/AY27	Riddler Knob
32	004/CY21	Air Bypass Slide
33	004/CY22P	Primary Air Inlet Flap
34	004/CY22S	Secondary Air Inlet Flap
35	004/AY22-1S	Bypass Air Flap
36	004/CY24	Flap Mounting Rod (inc. fixings)

Item	Part	Description
37	004/CY32	Air Control Rod
38	004/CY23	Actuator Assembly
39	008/CY39	Upper Quattro Box Gasket
40	010/CY20	Upper Quattro Box
41	010/CY19	Lower Quattro Box
42	002/CY01	Left Hand Door
43	002/CY02	Right Hand Door
44	001/CY10	Firebox (Island III)
45	010/CY37	Blanking Plate
46	010/CY61	Clamping Plate
47	010/CY35	Flue Collar
48	010/CY36	Flue Spacer Ring
49	012/CY11	Serial No. Label
50	010/CY34	Vert. Rear Flue Connector (Opt'l Extra)
51*	010/BW51	Ash Carrier (Optional Extra)

* These items are not shown on the drawing.

To obtain spare parts please contact your local stockist giving Model, Part No. and Description. In case of difficulty contact the manufacturer at the address shown.

This drawing is for identification purposes only

CHARNWOOD Bishops Way, Newport, Isle of Wight PO30 5WS, United Kingdom

T:+44 (0)1983 537777 F:+44 (0)1983 537788 charnwood@ajwells.co.uk www.charnwood.com

CE

CHARNWOOD - A.J.Wells & Sons Ltd.

Bishops Way, Newport, Isle of Wight PO30 5WS, United Kingdom

A Division of A.J.Wells & Sons Limited Registered in England No. 03809371

08

EN13240:2001

Island I, Island II and Island III Roomheaters fired by solid fuel

	Island I	Island II	Island III
EC Certificate of Conformity no.:	AY50-CPD-2006	BY50-CPD-2006	CY44-CPD-2006
Safe Distances to Combustibles			
Side	**450**	**450**	**600**
Rear	**600**	**600**	**600**
Emission of CO in combustion products :	0.63%	0.50%	0.30%
Flue gas temperature :	247°C	290°C	365°C
Space heating thermal output :	6.1kW	8.0kW	12.3kW
Energy efficiency :	78.5%	78.0%	76.4%
Fuel types :	Wood Logs		

Your Local Charnwood Premier Dealer:

CHARNWOOD Bishops Way, Newport, Isle of Wight PO30 5WS, United Kingdom

T:+44 (0)1983 537777 F:+44 (0)1983 537788 charnwood@ajwells.co.uk www.charnwood.com

A Division of A.J.Wells & Sons Limited Registered in England No. 03809371