Issue F

# Charnwood Country 12 WB MkII

1st July 2010

## Parts List

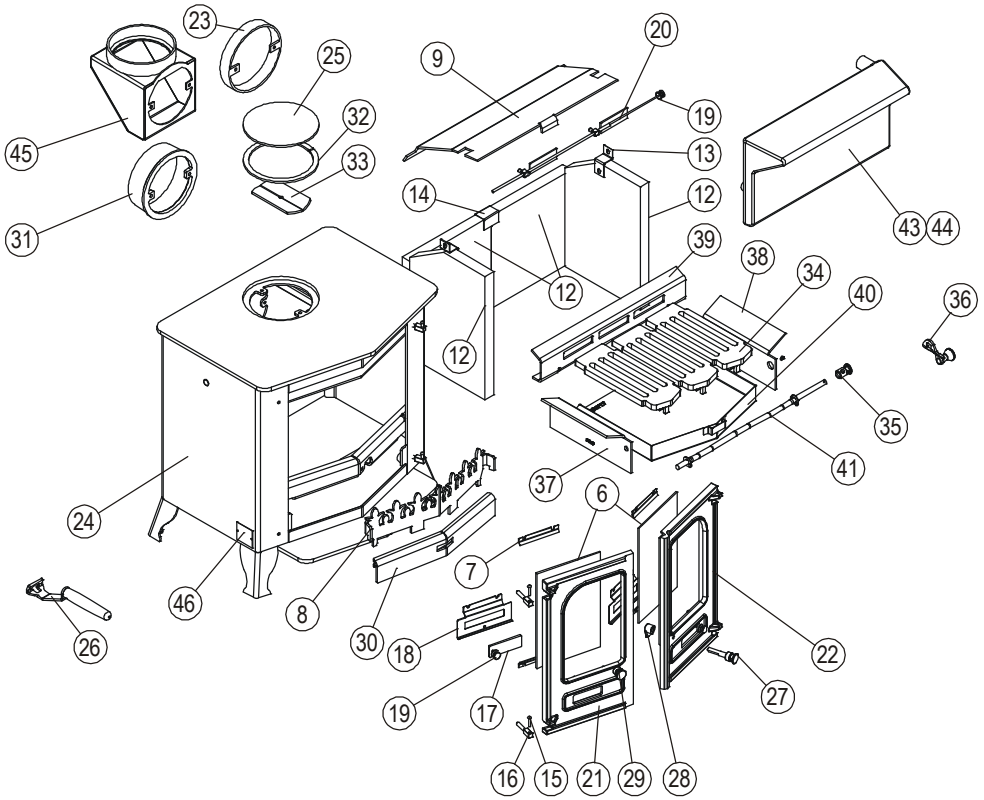


| Item | Part No. | Description | Ex.Vat. | Inc.Vat. |
|---|---|---|---|---|
| 3* | 008/LV35/S | Door Seal Set Incl. Adhesive | 23.35 | 27.44 |
| 4* | 008/FW29 | Door Seal Adhesive | 6.95 | 8.17 |
| 5* | 008/GV44S | Glass Channel (set of 8) | 6.10 | 7.17 |
| 6 | 006/LW30 | Glass (Inc Channel) | 31.95 | 37.54 |
| 7 | 004/GV23 | Glass Retainer | 2.55 | 3.00 |
| 8 | 010/DY08 | Fuel Retainer | 38.40 | 45.12 |
| 9 | 010/MV31 | Throat Plate | 45.15 | 53.05 |
| 12 | 011/MV28S | Set of Fire Bricks | 51.95 | 61.04 |
| 13 | 004/XV30 | Brick Retainer | 4.75 | 5.58 |
| 14 | 004/LV24 | Rear Brick Joining Bracket | 4.00 | 4.70 |
| 15 | 008/BW39/S | Hinge Pin Set | 2.35 | 2.76 |
| 16 | 008/FW27 | Hinge Post | 4.40 | 5.17 |
| 17 | 012/TW14 | Primary Air Slide | 15.20 | 17.86 |
| 18 | 004/DY26 | Primary Air Slide Guide | 9.95 | 11.69 |
| 19 | 002/TW13 | Air Control Knob | 11.55 | 13.57 |
| 20 | 004/GY14 | Airwash Slide | 22.50 | 26.44 |
| 21 | 002/GV01 | Left Hand Door | 59.00 | 69.33 |
| 22 | 002/GV02 | Right Hand Door | 59.00 | 69.33 |
| 23 | 010/TW55 | Flue collar for Cast Pipe (Opt'l Extra) | 44.65 | 52.46 |
| 24 | 001/GY10 | Firebox (Country 12 WB MkII) | 376.40 | 442.27 |
| 25 | 012/TW09 | Blanking Plate | 15.20 | 17.86 |
| 26 | 012/BV20/A | Ashpan / Door Opening Tool | 16.50 | 19.39 |
| 27 | 002/DY18 | R.H. Door Knob & Spindle | 13.10 | 15.39 |
| 28 | 002/AY14 | Door Catch Cam | 6.55 | 7.70 |
| 29 | 002/DY19 | Left Hand Door Knob | 9.45 | 11.10 |
| 30 | 010/DY14 | Wood Ash Retainer | 31.10 | 36.54 |
| 31 | 002/CH12B | Flue Collar | 44.65 | 52.46 |
| 32 | 010/NV11 | Flue Spacer Ring | 11.75 | 13.81 |
| 33 | 010/AY51 | Clamping Plate | 12.05 | 14.16 |
| 34# | 002/FY03 | Grate Plate | 21.85 | 25.67 |
| 35# | 002/DY21 | Riddler Knob | 13.80 | 16.22 |
| 36# | 008/DY27 | Riddling Tool | 9.10 | 10.69 |
| 37# | 010/GY04 | Side Grate Support Plate L.H. | 20.60 | 24.21 |
| 38# | 010/GY05 | Side Grate Support Plate R.H. | 20.60 | 24.21 |
| 39# | 010/GY06 | Rear Grate Support Plate | 20.60 | 24.21 |

| Item | Part No. | Description | Ex.Vat. | Inc.Vat. |
|---|---|---|---|---|
| 40# | 004/LV17 | Ashpan | 47.55 | 55.87 |
| 41# | 010/GY13 | Riddler Rod | 21.45 | 25.20 |
| 41a | 010/GY20 | Multifuel Kit (Optional Extra) | 160.00 | 188.00 |
| 42* | 008/DY23 | Riddler Rod Retaining Clips (pack of 10 | 7.90 | 9.28 |
| 43 | 010/MV25 | Boiler, Steel (Optional Extra) | 136.00 | 159.80 |
| 44 | 010/MV25/SS | Boiler, Stainless Steel (Optional Extra) | 236.00 | 277.30 |
| 45 | 010/TW33 | Vert. Rear Flue Connector (Opt'l Extra) | 68.00 | 79.90 |
| 46 | 012/MV11 | Serial No. Label | | |
| 47* | 010/EW51 | Ash Carrier (Optional Extra) | 66.00 | 77.55 |

* These items are not shown on the drawing.
\# These items are included in the optional multi-fuel kit.
Prices are shown in pounds sterling with vat at 17.5%
They are correct at the date shown but may be subject to change without notice. E. & O.E
These prices are subject to a carriage charge.

To obtain spare parts please contact your local stockist giving Model, Part No. and Description.
In case of difficulty contact the manufacturer at the address shown.
This drawing is for identification purposes only.


**CHARNWOOD** Bishops Way, Newport, Isle of Wight PO30 5WS, United Kingdom
T:+44 (0)1983 537799 F:+44 (0)1983 537788 charnwood@ajwells.co.uk www.charnwood.com