Issue J

Charnwood Country 4 MkII

1st July 2010

Parts List

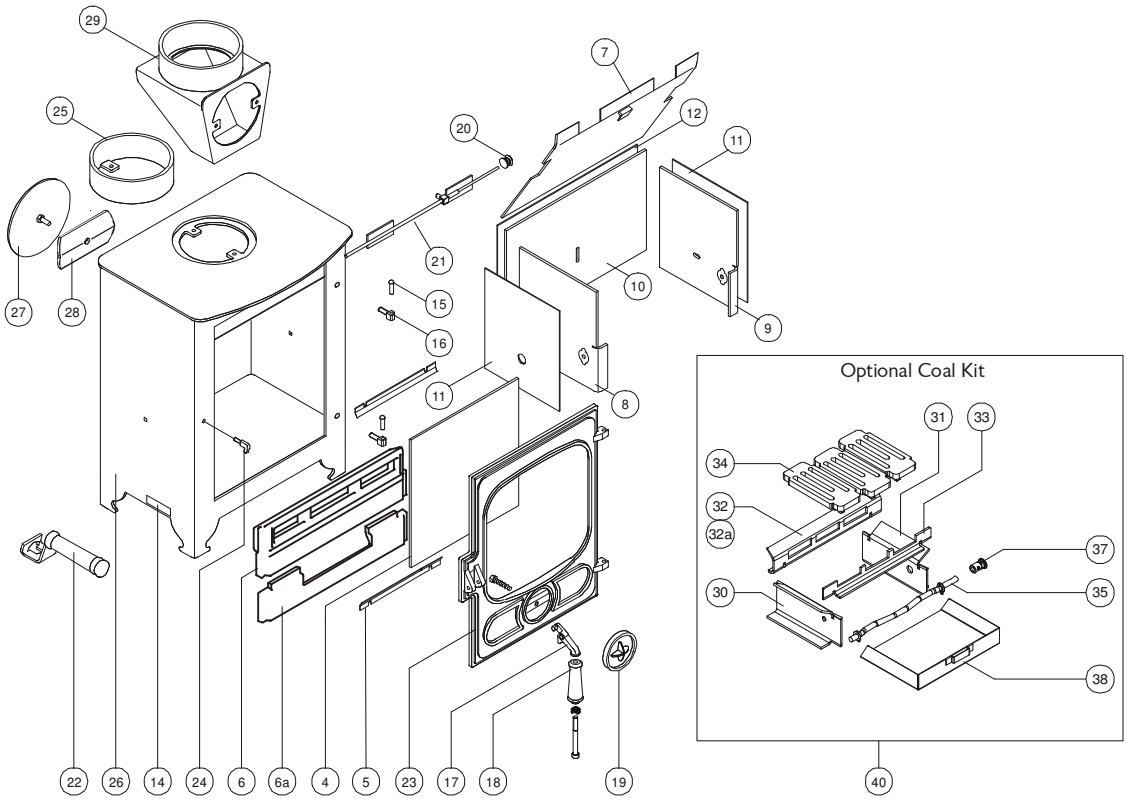

Item	Part No.	Description	Ex.Vat.	Inc.Vat.
1*	008/PV21	Door Seal	11.10	13.04
2*	008/FW29	Door Seal Adhesive	6.95	8.17
3*	008/PV23	Glass Seal	8.10	9.52
4	006/PV19	Glass (Inc Seal)	46.75	54.93
5	004/BW23	Glass Retainer	2.55	3.00
6	002/EY23	Fuel Retainer	36.95	43.42
6a	002/EY24	Wood Ash Retainer	30.45	35.78
7	010/PV31	Throat Plate	32.15	37.78
8	010/EY15L	L.H. Side Fire Plate	27.50	32.31
9	010/EY15R	R.H. Side Fire Plate	27.50	32.31
10	010/EY16	Back Fire Plate	29.20	34.31
11	011/PV26	Side Ceramic Gasket	8.10	9.52
12	011/PV27	Back Ceramic Gasket	8.70	10.22
13	008/EY29	Set of Fire Plates(3) & Gaskets	57.65	67.74
14	012/PV11	Serial No. Label		
15	008/PV28/S	Hinge Pin Set (2 per set)	2.35	2.76
16	008/FW28	Hinge Post	4.60	5.41
17	002/PV03	Door Catch Lever	17.50	20.56
18	008/PV08	Door Handle (Incl. Screw & Washer)	8.80	10.34
19	002/PV02	Primary Air Control	11.85	13.92
20	002/TW13	Air Control Knob	11.55	13.57
21	004/EY48	Airwash Slide	22.50	26.44
22	012/BV20/A	Ashpan / Door Opening Tool	16.50	19.39
23	002/PV01	Door	61.95	72.79
24	002/PV13	Door Latch Hook	5.60	6.58
25	002/PV12B	Flue Collar	34.75	40.83
26	001/EY10	Firebox (Country 4 MkII)	270.75	318.13
27	012/PV09	Blanking Plate	15.20	17.86
28	010/EY51	Clamping Plate	12.05	14.16
29	010/PV33	Vert. Rear Flue Adapter (Opt'l Extra)	68.00	79.90
30	010/EY04	Left hand Side Grate Support	20.60	24.21
31	010/EY05	Right hand Side Grate Support	20.60	24.21
32	010/EY09	Rear Grate Support	20.60	24.21
32a	010/EY06B	Rear Grate Support (Use with boiler)	20.60	24.21
33	010/EY06	Front Grate Support	20.60	24.21

Item	Part No.	Description	Ex.Vat.	Inc.Vat.
34	002/EY03	Grate Plate	20.60	24.21
35	010/EY13	Riddler Rod	21.45	25.20
36*	008/DY23	Riddler Rod Retaining Clips (pack of 10	7.90	9.28
37	002/DY21	Riddler Knob	13.80	16.22
38	004/PV17	Ashpan	21.85	25.67
40	010/EY20	Multifuel Kit (Optional Extra)	143.00	168.03
41*	010/EW51	Ash Carrier (Optional Extra)	66.00	77.55
42*	010/PV35	Boiler, Steel (Optional Extra)	117.00	137.48
43*	010/PV35/SS	Boiler, Stainless Steel (Opt'l Extra)	206.00	242.05
44*	004/DY22	Riddler Blanking Disc	2.95	3.47

* These items are not shown on the drawing.
Prices are shown in pounds sterling with vat at 17.5%
They are correct at the date shown but may be subject to change without notice. E. & O.E
These prices are subject to a carriage charge.

To obtain spare parts please contact your local stockist giving Model, Part No. and Description.
In case of difficulty contact the manufacturer at the address shown.
This drawing is for identification purposes only.

CHARNWOOD Bishops Way, Newport, Isle of Wight PO30 5WS, United Kingdom
T:+44 (0)1983 537799 F:+44 (0)1983 537788 charnwood@ajwells.co.uk www.charnwood.com