Issue H

Charnwood Island II

1st July 2010

Parts List

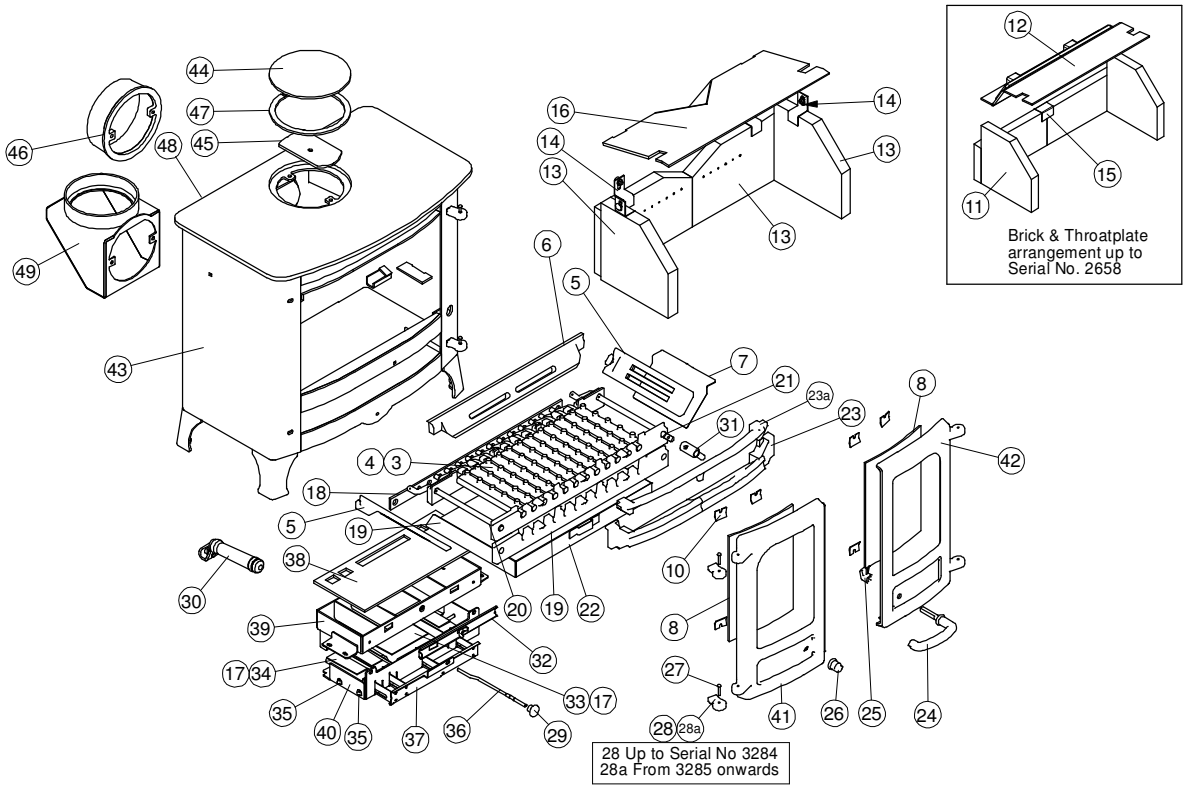

Item	Part No.	Description	Ex.Vat.	Inc.Vat.
1*	008/BY35S	Door Seal Set Inc. Adhesive	26.00	30.55
2*	008/FW29	Door Seal Adhesive	6.95	8.17
3	002/CG20	Bottom Grate Bar	10.65	12.51
4	002/CG20S12	Set of Grate Bars (12)	99.05	116.38
5	002/CY15	Side Fire Plate	21.85	25.67
6	002/BY16	Back Fire Plate	40.45	47.53
7	004/BY24	Ash Shedding Plate	10.65	12.51
8	006/BY18	Glass	49.40	58.05
9*	008/AY45	Glass Seal	7.90	9.28
10	004/KV23	Glass Retainer	0.47	0.55
11#	011/BY29S	Set of Firebricks (4)	51.80	60.87
12#	010/BY31	Throat Plate	51.60	60.63
13	011/BY48S	Set of Fire Bricks (4)	53.00	62.28
14	004/XV30	Brick Retainer	4.75	5.58
15	004/LV24	Rear Brick Joining Bracket	4.00	4.70
16	010/BY47	Throat Plate	51.60	60.63
17	008/AY26S	Set of Air Inlet Flap Pads	11.20	13.16
18	012/BY33	Mover Bar	30.05	35.31
19	002/BY30	Carrier Bar	34.75	40.83
20	012/AY13	Idler Rod	20.95	24.62
21	012/AY15	Riddler Rod	21.45	25.20
22	004/BY17	Ashpan	51.35	60.34
23	002/BY07B	Front Firebar	38.10	44.77
23a	002/BY08	Deepening Bar	31.85	37.42
24	008/KV16	R.H. Door Handle	13.80	16.22
25	002/AY14	Door Catch Cam	6.55	7.70
26	008/KV13	L.H. Door Knob	2.20	2.59
27	008/BW39/S	Hinge Pin Set	2.35	2.76
28	002/AY28	Hinge Post	9.00	10.58
28a	002/PY24	Hinge Post	10.35	12.16
29	008/AY37	Air Control Knob	3.15	3.70
30	010/AY34	Riddling/Ashpan Tool	16.85	19.80
31	002/AY27	Riddler Knob	13.35	15.69
32	004/AY21	Air Bypass Slide	13.35	15.69
33	004/AY22-1P	Primary Air Inlet Flap	13.35	15.69
34	004/AY22-1S	Secondary/Bypass Air Inlet Flap	13.35	15.69
35	004/AY24-02	Flap Mounting Rod (inc. fixings)	6.55	7.70
36	004/BY23-07	Air Control Rod	9.45	11.10
37	004/AY23	Actuator Assembly	32.25	37.89
38	008/AY39	Upper Quattro Box Gasket	11.75	13.81
39	010/AY20	Upper Quattro Box	49.60	58.28
40	010/AY19	Lower Quattro Box	32.50	38.19
41	002/BY01	Left Hand Door	55.85	65.62
42	002/BY02	Right Hand Door	55.85	65.62
43	001/BY10	Firebox (Island II)	563.15	661.70
44	012/TW09	Blanking Plate	15.20	17.86
45	010/AY51	Clamping Plate	12.05	14.16
46	002/CH12B	Flue Collar	44.65	52.46
47	010/NV11	Flue Spacer Ring	11.75	13.81
48	012/BY11	Serial No. Label		
49	010/TW33	Vert. Rear Flue Connector (Opt'l Extra)	68.00	79.90
50*	010/BW51	Ash Carrier (Optional Extra)	66.00	77.55

* These items are not shown on the drawing.
\# These items are only used on models up to Serial No 2658
Prices are shown in pounds sterling with vat at 17.5%
They are correct at the date shown but may be subject to change without notice. E. & O.E
These prices are subject to a carriage charge.

To obtain spare parts please contact your local stockist giving Model, Part No. and Description. In case of difficulty contact the manufacturer at the address shown.
This drawing is for identification purposes only.

CHARNWOOD Bishops Way, Newport, Isle of Wight PO30 5WS, United Kingdom
T:+44 (0)1983 537799 F:+44 (0)1983 537788 charnwood@ajwells.co.uk www.charnwood.com