Issue L

Charnwood LA45iB/50iB

1st July 2010

Parts List

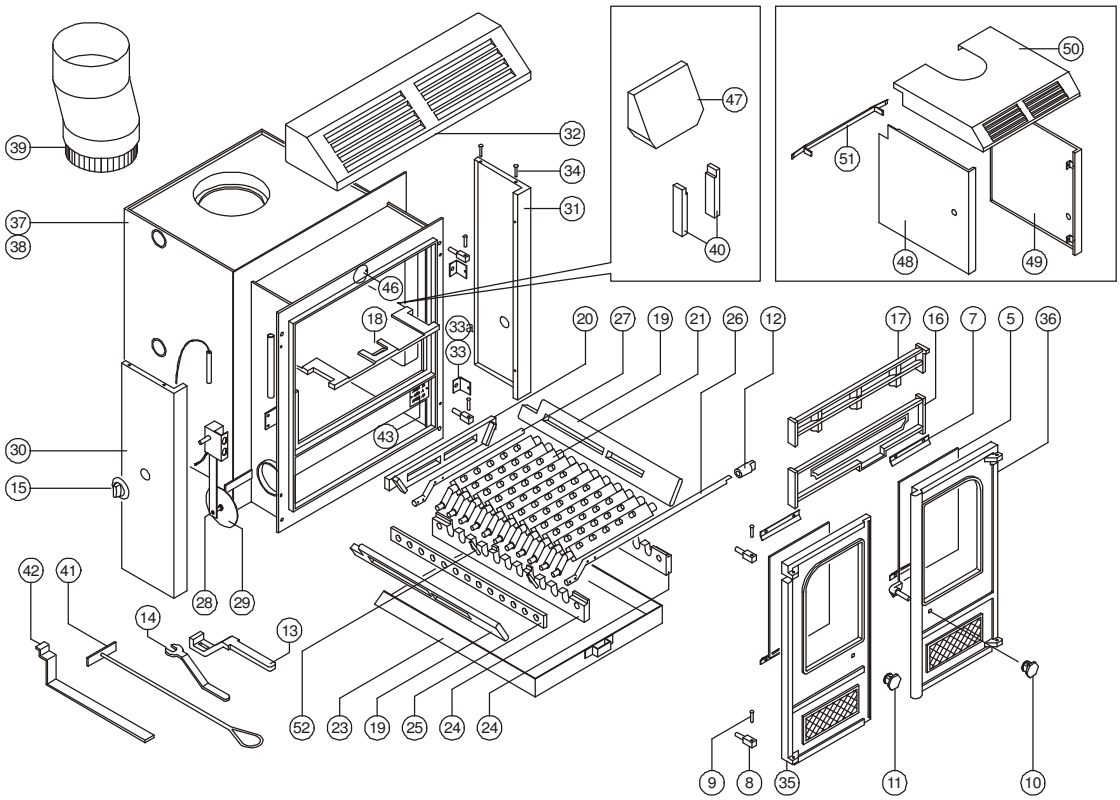

Item	Part No.	Description	Ex.Vat.	Inc.Vat.
3*	008/RW35/S	Door Seal Set Incl. Adhesive	30.40	35.72
4*	008/FW29	Door Seal Adhesive	6.95	8.17
5	006/RW18	Glass Inc Glass Channel	44.20	51.94
6*	008/RW44/S	Glass Channel - set of 8	6.10	7.17
7	004/EW23	Glazing Bar	2.55	3.00
8	008/FW27	Hinge Post	4.40	5.17
9	008/BW39/S	Hinge Pin Set	2.35	2.76
10	008/RW43/A	Door Catch Assembly R.H.	14.30	16.80
11	002/HV12	Door Knob L.H. (Round)	9.85	11.57
12	002/CG06	Riddler Knob	12.55	14.75
13	002/BW20	Riddler/Ashpan Tool	16.15	18.98
14	002/BW26	Door Opening Tool	6.95	8.17
15	008/BW50	Thermostat Knob	3.15	3.70
16	002/FW07	Front Firebar	49.50	58.16
17	002/FW08	Deepening Bar	34.40	40.42
18	002/FW32	Throat Plate	43.10	50.64
19	002/FW15	Side Fire Plate	26.85	31.55
20	002/FW16	Back Fire Plate	22.10	25.97
21	002/CG01	Bottom Grate Bar	10.65	12.51
22	002/CG01S11	Set of Grate Bars (11 per set)	91.10	107.04
23	004/FW17	Ashpan	45.65	53.64
24	002/EW30	Carrier Bar	32.35	38.01
25	012/EW33	Mover Bar	29.65	34.84
26	012/FW14	Riddler Rod	22.10	25.97
27	012/CG05	Idler Rod	20.95	24.62
28	008/FW48	Thermostat	33.80	39.72
29	008/BW57	Thermostat Flap 90mm dia	6.00	7.05
30	005/RW05	Side Panel L.H.	58.55	68.80
31	005/RW04	Side Panel R.H.	58.55	68.80
32	005/RW06	Hood Panel	85.10	99.99
33	004/RW13	Panel Fixing Bracket	2.75	3.23
33a	012/RW30	Hood & Panel Fixing Kit	8.50	9.99
34	008/WW14S	Hood Fixing Pin Set (4)	3.15	3.70
35	003/RW01	Door L.H.	66.50	78.14
35a	003/RW01/BL/A	Door Assembly L.H.	111.95	131.54

Item	Part No.	Description	Ex.Vat.	Inc.Vat.
36	003/RW02	Door R.H.	66.50	78.14
36a	003/RW02/BL/A	Door Assembly R.H.	118.00	138.65
37	009/LA50IB/A	Firebox Assembly (LA50iB)	653.85	768.27
38	009/LA45IB/A	Firebox Assembly (LA45iB)	653.85	768.27
39	012/FW12	Flue Offset (Optional Extra)	83.00	97.53
40	011/JW09	Fire Brick (45iB)	12.45	14.63
41	012/FW34	Scraper Tool	8.25	9.69
42	008/FW33	Throatplate Tool	7.55	8.87
43		Serial No. Label		
44*	010/FW51	Ash Carrier (Optional Extra)	66.00	77.55
45*	008/TH02/L	Low Level Pipe Stat (Opt'l Extra)	33.00	38.78
46	008/RW09	Secondary Air Flap	2.85	3.35
47	011/AV09	Boiler Reduction Brick (Optional Extra)	31.95	37.54
48	005/RW23	Side Panel L.H. (Freestanding Kit)	123.00	144.53
49	005/RW24	Side Panel R.H. (Freestanding Kit)	123.00	144.53
50	005/RW25	Top Panel (Freestanding Kit)	171.15	201.10
51	010/RW26	Rear Panel Bracket (F'standing Kit)	8.50	9.99
52	008/BW40	Carrier Bar Roll Pin (pair)	3.15	3.70

* These items are not shown on the drawing.
Prices are shown in pounds sterling with vat at 17.5%
They are correct at the date shown but may be subject to change without notice. E. & O.E
These prices are subject to a carriage charge.

To obtain spare parts please contact your local stockist giving Model, Part No. and Description.
In case of difficulty contact the manufacturer at the address shown.
This drawing is for identification purposes only.

CHARNWOOD Bishops Way, Newport, Isle of Wight PO30 5WS, United Kingdom
T:+44 (0)1983 537799 F:+44 (0)1983 537788 charnwood@ajwells.co.uk www.charnwood.com